Coil for cartridge valve

DC 12V
DC 24V
Other can be customized

BYC04-13-02K27

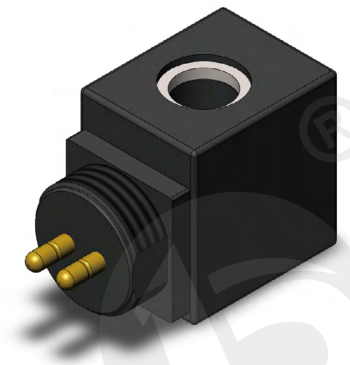

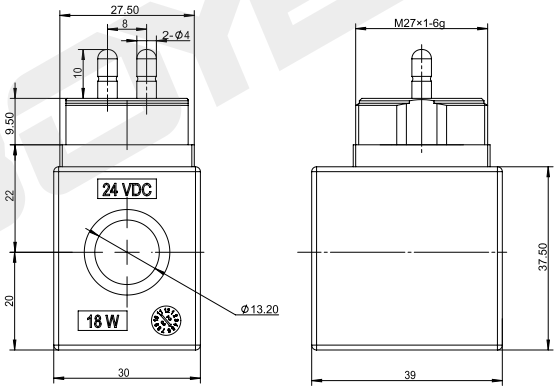

Technical parameter					
Ambienttemperature	°C	-25 ~ 50	Degree of protection		IP67
Voltage fluctuation range	%	85 ~ 110	Power on duration	%	100
Rated power	W	18	Insulation class		H（180）

DC 12V
DC 24V
Other can be customized

BYC04-13-03D

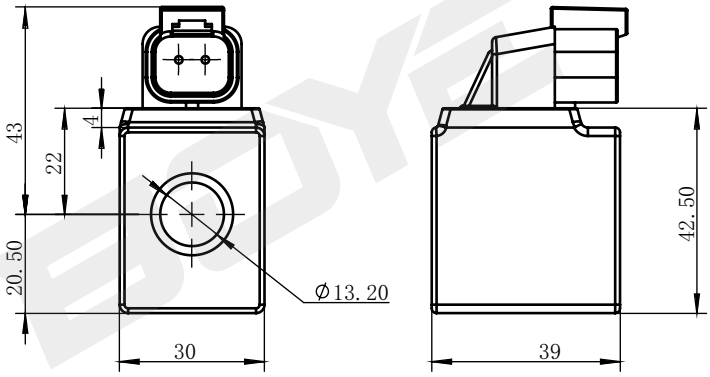

Technical parameter					
Ambienttemperature	°C	-25 ~ 50	Degree of protection		IP67
Voltage fluctuation range	%	85 ~ 110	Power on duration	%	100
Rated power	W	18	Insulation class		H（180）

The sample data comes from the laboratory environment and is only for reference. If your company needs the latest data or has special needs, please contact Boye hydraulic engineer.

TEL:0574-86587131
www.nbboye.net