BYS04-47-01L

双向控制阀用电磁铁

Solenoid for two-way control valve

DC 12V
DC 24V

其它规格可定做
Other can be customized

- 适用于双向控制电磁阀
- 配备手动应急装置
- 线圈全塑封工艺

- Applicable to two-way control solenoid valve
- Equipped with manual emergency device
- Full plastic sealing process of coil

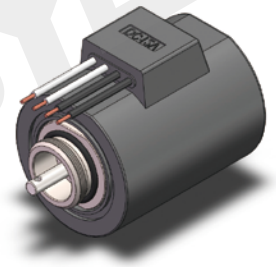

外形及连接尺寸

Outline and connection dimensions

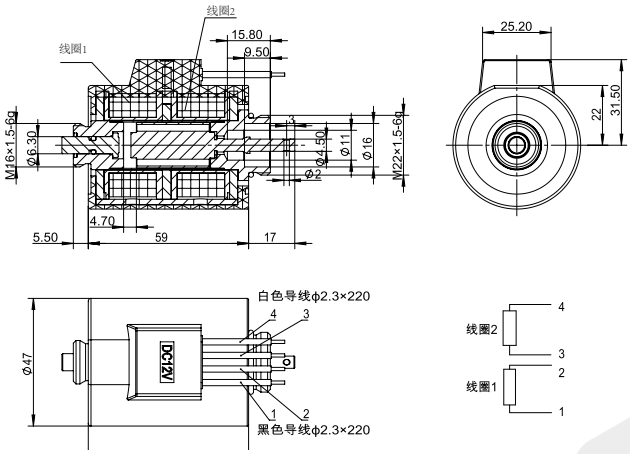

技术参数 /technical parameter Технические характеристики			
环境温度 / Ambient temperature Температураокружающей среды	°C	-25~50	
额定电压 / Rated voltage Номинальное напряжение	VDC	12	24
额定电流 / Rated current Номинальный ток	A	2.4	0.6
额定电阻 / Rated resistance Номинальное сопротивление	Ω	5	20
额定行程 / Rated stroke Номинальный ход	mm	2.3	
全行程 / Full stroke Полный ход	mm	4.7	
额定推力 / Rated thrust Номинальная тяга	N	12	
重复精度 / Repetition accuracy Точность повторения	%	≤ 1	
工作油压 / Working oil pressure Рабочее давление масла	MPa	≤ 21	
防护等级 / Degree of protection Степень защиты		IP65	
通电持续率 / Power on duration Длительность включения	%	100	
绝缘等级 / Insulation class Класс изоляции		H（180）	
电气连接方式 / Electrical connection mode Режим электрического подключения		四引线	

注意事项

matters needing attention

1. 线圈不得单独通电使用，有烧损风险！
2. 非防爆线圈，不得使用在有爆炸危险的介质中！
3. 线圈安装后，必须接地可靠，否则有触电危险！

1. The coil shall not be powered on alone, which has the risk of burning!
2. Non explosion-proof coil shall not be used in medium with explosion risk!
3. After the coil is installed, it must be grounded reliably, otherwise there is a risk of electric shock！

力 - 位移特性曲线

F-S characteristic curve

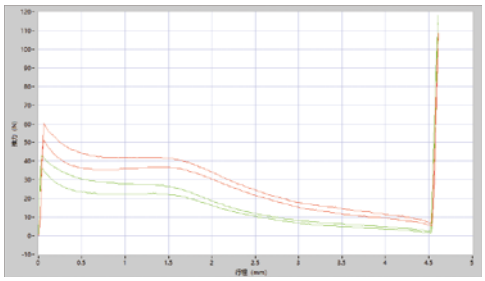

样本数据来源于试验室环境，仅供参考，贵公司如需最新数据或有特殊需求，欢迎联系搏业液压工程师。
The sample data comes from the laboratory environment and is only for reference. If your company needs the latest data or has special needs, please contact Boye hydraulic engineer.

TEL:0574-86587131
www.nbboye.net