BYS01-45-01L

Solenoid for two-way control valve

DC 12V
DC 24V

Other can be customized

- Applicable to two-way control solenoid valve
- Equipped with manual emergency device
- Full plastic sealing process of coil

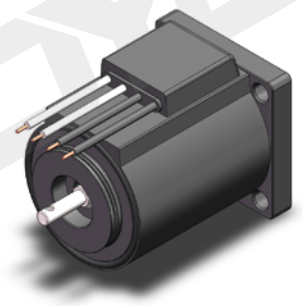

Outline and connection dimensions

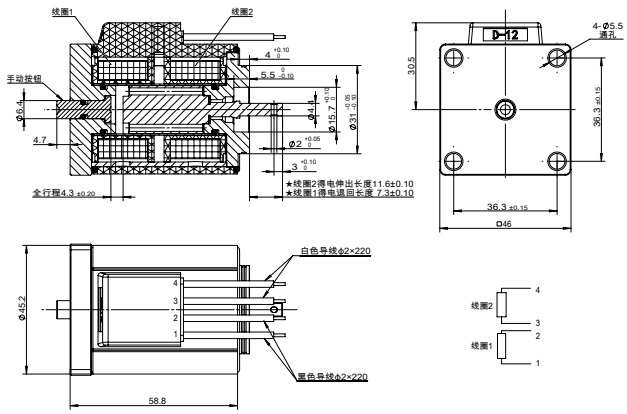

technical parameter			
Ambient temperature	℃	-25~50	
Rated voltage	VDC	12	24
Rated current	A	2.2	1.1
Rated resistance	Ω	5.5	22
Rated stroke	mm	2.2	
Full stroke	mm	4.4	
Rated thrust	N	12	
Repetition accuracy	%	⩽ 1	
Working oil pressure	MPa	⩽ 21	
Degree of protection		IP65	
Power on duration	%	100	
Insulation class		H（180）	
Electrical connection mode		Four-wire	

matters needing attention

1. The coil shall not be powered on alone, which has the risk of burning!
2. Non explosion-proof coil shall not be used in medium with explosion risk!
3. After the coil is installed, it must be grounded reliably, otherwise there is a risk of electric shock！

F-S characteristic curve

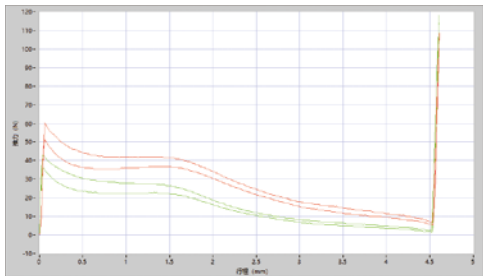

The sample data comes from the laboratory environment and is only for reference. If your company needs the latest data or has special needs, please contact Boye hydraulic engineer.