BYJ12-54-01A

交流湿式阀用电磁铁

AC solenoids for hydraulics valves

AC 110V 50HZ
AC 220V 50HZ

其它规格可定做
Other can be customized

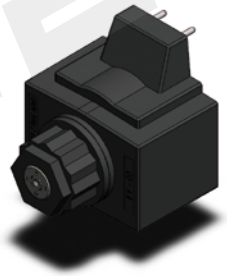

- 适用于 10 通径液压电磁换向阀
- 螺纹连接，线圈可实现免停机更换
- 配备手动应急装置
- 线圈内孔 ϕ26
- 采用 BMC 热固性塑料封装

- Applicable to 10-way hydraulic solenoid directional valve
- With threaded connection, the coil can be replaced without shutdown
- Equipped with manual emergency device
- Coil inner hole ϕ26
- Encapsulated in BMC thermosetting plastic

外形及连接尺寸

Outline and connection dimensions

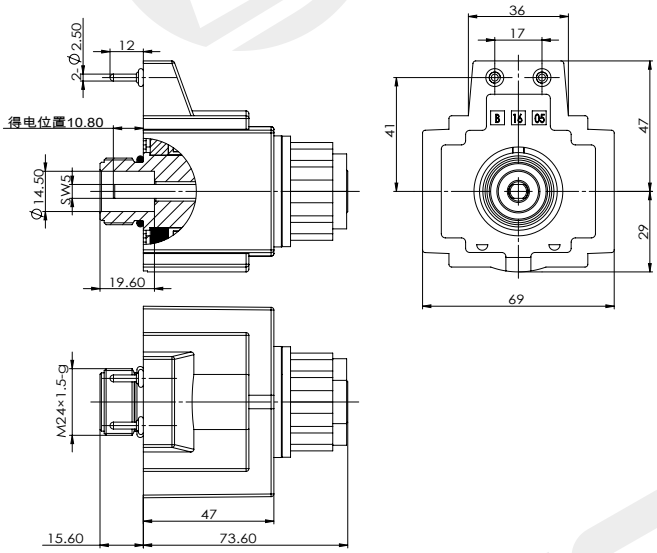

技术参数 /technical parameter		
环境温度 Ambient temperature	°C	-25~50
电压波动范围 Voltage fluctuation range	%	85 ～ 110
额定功率 Rated power	W	40
额定行程 Rated stroke	mm	4
全行程 Full stroke	mm	⩾ 8.5
工作油压 Working oil pressure	Mpa	⩽ 21
防护等级 Degree of protection		IP65
操作频率 Operating frequency	T/h	12000
通电持续率 Power on duration	%	100
绝缘等级 Insulation class		H(180)
电气连接方式 Electrical connection mode		接线盒式

注意事项

matters needing attention

1. 线圈不得单独通电使用，有烧损风险！
2. 非防爆线圈，不得使用在有爆炸危险的介质中！
3. 线圈安装后，必须接地可靠，否则有触电危险！

1. The coil shall not be powered on alone, which has the risk of burning!
2. Non explosion-proof coil shall not be used in medium with explosion risk!
3. After the coil is installed, it must be grounded reliably, otherwise there is a risk of electric shock！

力 - 位移特性曲线

F-S characteristic curve

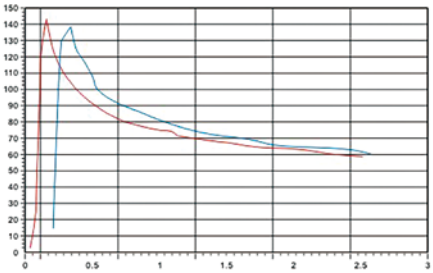

样本数据来源于试验室环境，仅供参考，贵公司如需最新数据或有特殊需求，欢迎联系搏业液压工程师。
The sample data comes from the laboratory environment and is only for reference. If your company needs the latest data or has special needs, please contact Boye hydraulic engineer.

TEL:0574-86587131
www.nbboye.net