BYJ11-54-01A

AC solenoids for hydraulics valves

AC 110V 50HZ
AC 220V 50HZ

Other can be customized

- Applicable to 10-way hydraulic solenoid directional valve
- With threaded connection, the coil can be replaced without shutdown
- Equipped with manual emergency device
- Coil inner hole ϕ26
- Encapsulated in BMC thermosetting plastic

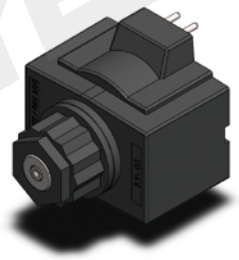

Outline and connection dimensions

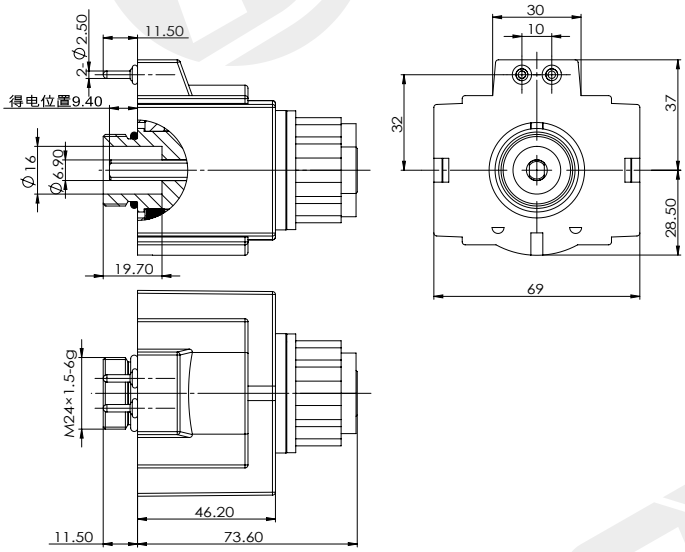

technical parameter		
Ambient temperature	°C	-25~50
Voltage fluctuation range	%	85 ~ 110
Rated power	W	38
Rated stroke	mm	4
Full stroke	mm	⩾ 8.5
Working oil pressure	Mpa	⩽ 21
Degree of protection		IP65
Operating frequency	T/h	12000
Power on duration	%	100
Insulation class		H(180)
Electrical connection mode		J/B

matters needing attention

1. The coil shall not be powered on alone, which has the risk of burning!
2. Non explosion-proof coil shall not be used in medium with explosion risk!
3. After the coil is installed, it must be grounded reliably, otherwise there is a risk of electric shock！

F-S characteristic curve

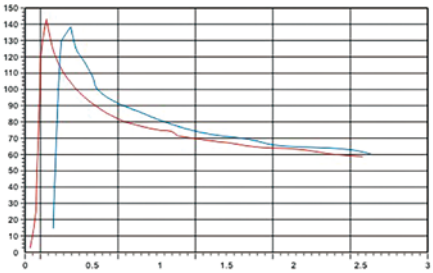

The sample data comes from the laboratory environment and is only for reference. If your company needs the latest data or has special needs, please contact Boye hydraulic engineer.

TEL:+86-574-86587131
www.nbboye.net