BYG07-37-01MD

比例阀用电磁铁

Electromagnet for proportional valve

DC12V 1.76A
DC24V 1.2A

其它规格可定做
Other can be customized

- 适用于 5 通径 KBPS 电液比例溢流阀
- 配备手动调整装置
- 线圈内孔 ϕ19，全塑封工艺

- Suitable for 5-port KBPS electro-hydraulic proportional relief valve
- Equipped with manual adjustment device
- Coil inner hole ϕ 19. All-plastic sealing process

外形及连接尺寸

Outline and connection dimensions

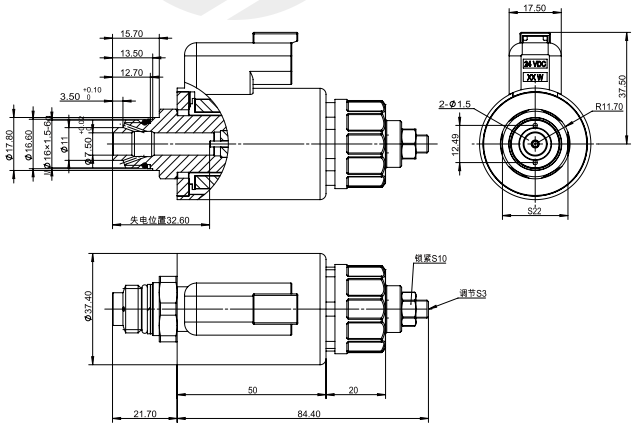

技术参数 /technical parameter			
环境温度 Ambient temperature	°C	-25~50	
额定电压 Rated voltage	VDC	12	24
额定电流 Rated current	A	1.76	1.2
最大电流 Maximum current	A	1.8	1.25
额定电阻 Rated resistance	Ω	2.3	4.8
额定行程 Rated stroke	mm	2.4	
全行程 Full stroke	mm	2.7	
额定推力 Rated thrust	N	40	
力滞环 Force hysteresis	%	≤ 4	
电流滞环 Current hysteresis	%	≤ 4	
重复精度 Repetition accuracy	%	≤ 1	
工作油压 Working oil pressure	MPa	≤ 21	
防护等级 Degree of protection		IP67	
通电持续率 Power on duration	%	100	
绝缘等级 Insulation class		H（180）	
电气连接方式 Electrical connection mode		DT04-2P	

力 - 位移特性曲线

F-S characteristic curve

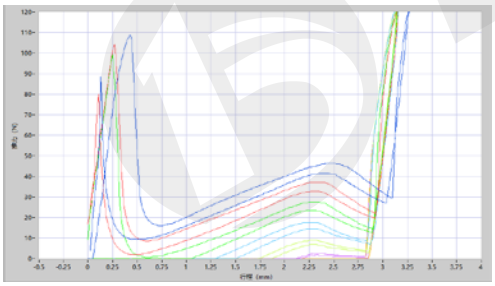

注意事项

matters needing attention

1. 首次使用或长期停机后启用，请先将系统内空气排净！
2. 可任意方向安装，建议水平安装。

1. After the first use or long-term shutdown, please exhaust the air in the system first!
2. It can be installed in any direction, and it is recommended to install horizontally.

样本数据来源于试验室环境，仅供参考，贵公司如需最新数据或有特殊需求，欢迎联系搏业液压工程师。
The sample data comes from the laboratory environment and is only for reference. If your company needs the latest data or has special needs, please contact Boye hydraulic engineer.

TEL:0574-86587131
www.nbboye.net